CARROLLTON
TEXAS

Development Services

COMMERCIAL

Preconstruction 2014

Visit the virtual information kiosk "VIK" at: cityofcarrollton.com/VIK

Virtual Information Kiosk

Table of Contents

Preconstruction Meeting Agenda.....1
Interactive Voice Response & Automated Inspection Request System 4
Verification Letter.....8
Foundation Engineered Form Letter.....9
Site Paving Engineered Form Letter.....10
Site Drainage Detention Pond Confirmation Engineered Form Letter.....11
Maintenance Bond 12
Certificate of Occupancy Guide.....15
Request for Lane Closure in R.O.W. 16
City Ordinance on Unlawful Noise.....17
Grease Interceptor Sizing Guidelines 21
Commercial Drive Approach Inspection Checklist 28
Summary of Procedures Prior to Installation of Backflow Preventers.....30
Bacteriological Water Sampling Services 31
Storm Water Pollution Prevention Program 32
Erosion Control Procedure.....42
Customer Comments.....43

BUILDING DEVELOPMENT HOTLINE
972-466-4909

Building Inspection
1945 E. Jackson Road
Carrollton, Texas 75006
Fax 972-466-3220

E-mail: BldgInsp@cityofcarrollton.com

Preconstruction Meeting Agenda

1. Introduction of participants

2. Environmental Services
   a. Storm water pollution protection program (SWPPP)
   b. Erosion control plan
   c. Pollution control
   d. SWPPP coordinator is Krista Pender

3. Fire Prevention - Fire Marshal
   a. Address must be legible from street in case of job site injury
   b. Entrance and access to slab must be in place before going above slab and be able to hold 80,000 lbs. of pressure
   c. Three separate permits required are Underground, Aboveground and Fire Alarm (Construction Guide on Website for information on Plan Submittal)
   d. Flow tests for fire hydrants
   e. Knox box location
   f. Plan changes must be reviewed by Fire Marshal
   g. Fire Department will perform all fire inspections; call Fire Dept. with number on permit, not Building Inspection (24 hours in advance)
   h. 100% 2 year maintenance bond on vault and underground fire line in easement. Would prefer this to be wrapped in with the city's utility bond. Vault not required anymore, double detector check can be placed in riser room with port door access to outside for reading of water meter

4. Landscape Inspections
   a. As of January 1, 2009 the new TCEQ requirements
   b. Irrigation is a separate permit
   c. Irrigation final inspection is a 1024 inspection code
   d. Landscape inspection is a 4035 inspection code
   e. Rain and freeze sensor location
   f. Building Inspection department new handout of the Irrigation Ordinance
   g. Protect existing trees
   h. Arborist will do a landscape inspection before a C.O. is given
   i. City contact employee is City Arborist, Lorri Dennis

5. Building Inspection IVR System
   a. IVR handout; cutoff time
   b. General contractor calls in all inspections through IVR system
   c. All fire inspections go through Fire Department
   d. Disapproval items; inspections results/questions
   e. City contact employee - Permit Services Supervisor, Tony Vo
   f. Separate permits and other fees: fence, irrigation system, early releases, pre-brick, temporary CO
   g. All contractors' registrations must be current and all fees must be paid
   h. General contractor is required to set up an account with Utility Customer Service within five business days of issuance of permit
   i. All correspondence must have project name, address and permit number

6. Backflow prevention certification
   a. All backflow assemblies will meet required compliance with city codes, and devices will be tested for the protection of the public water supply prior to issuance of Certificate of

Occupancy

b. All flushing of new water mains must discharge to sanitary sewer.
c. All water from hydrants must have a city meter and backflow device. You may pick one up at 2711 Nimitz from the meter shop
d. City employee contact is Crystal Lee

7. Building Inspection/Construction Inspection
   a. Inspection procedures/construction work hours
      - No construction equipment or machinery shall be operated before 6:00 a.m. or after 8:00 p.m. within 1,000 feet of any residence.
      - Saturday work hours are 8:00 a.m. to 7:00 p.m.
      - No work allowed on Sundays or city holidays in the R.O.W. unless prior approval is received
      - After hours inspections at $40 per hour (minimum 2 hours); paid prior to inspection
   b. Testing of water samples: scheduled and paid in advance at Central Service Center at 2711 Nimitz Lane, fee is $75 per 1,000 feet of pipe
   c. General Design Standards issued to contractor
   d. Barrier free ramp checklist
   e. Required notice for lane closure in R.O.W.
   f. MEPs not reviewed during plan review, but engineer's seal is required. Verified for code compliance on job site

8. Plumbing and mechanical code items
   - An approved Form Board Survey must be on file before a plumbing rough inspection is approved
   - Fire dampers/smoke dampers
   - Grease interceptors, one per food establishment
   - Gas system must be tested on a 3 ½" diameter diaphragm gas gauge with current calibration date
   - Floor drains/trap primers or guards
   - Condensate drains tied in to sewer
   - All hot water lines need to be insulated
   - PEX water piping is allowed in the city of Carrollton

9. Building and electrical code items
   a. 2011 NEC and 2012 International Energy Conservation Code
   b. Occupancy: restaurant, hospital or retail
   c. Type of wall and building construction (metal studs/wood) separation walls maintained—Romex vs. M/C cable
   d. Make sure life safety systems are in place (emergency lights, exit lights, etc.)
   e. Aluminum for service only of 1/0 or larger
   f. M/C cable is allowed (any cables with an insulated green wire)
   g. Grounding system with concrete encased electrode and sized accordingly on multi-tenant spaces electrode systems need to be sized for all spaces to a maximum of 3/0 and terminated at a protected location that is accessible. (If needed, show example for tenant spaces)
   h. Ground fault for kitchen area for all general use outlets
   i. Service must be underground for first 200' from property line/no overhead lines
   j. Install 10" address number illuminated directly or indirectly on front of building
   k. An elevation certificate may be required

l. Energy code requirements and inspections
m. MEP's are not reviewed in plan review process; they are done in the field

10. Building Inspection Department – Project Manager
    a. Inspector work hours/inspection procedures
        - Mon. – Thurs. 7:00 a.m. to 4:30 p.m.; Fri. 7:00 a.m. to 11:00 a.m.
    b. Automated Inspection Request System
        - Hours available/cut-off times for inspections, 7:00 a.m. for current day inspections, after 7:00 a.m. for next day inspections (no inspections Friday afternoon)
        - Use of system (brochure)
        - Reinspections - $50
        - Temporary service/const. heat permits - $100
    c. City approved plans required on job site
    d. Important information
        - All pavements in R.O.W. must be pre-inspected for steel, and a construction inspector must be on site while concrete is being poured. Batch design reports for concrete required in city R.O.W.
        - Engineer's confirmation letter acceptable in lieu of foundation inspection (attached)
        - Engineer's confirmation letter required prior to final inspection for the following (attached)
            - Site grading
            - Site paving
            - Site drainage
            - Structural steel/tilt wall
    e. Record drawings shall be 22" x 34" in size and shall consist of two (2) blueline or blackline prints.
        - The digital file(s) shall be a TIFF (tagged image file format). The TIFF shall be 300 dpi (dots per inch) monochrome. (Refer to GDS Page 1-7 Section 4)
        - Maintenance bond—2 year, 100% of construction cost for work in R.O.W. and city maintained easements on city bond form
    f. Site development
        - Light intensity/glare standards (attached)
        - Drainage easements cannot be obstructed
        - Visibility clips (see landscape plans)
        - Fire lane striping
        - Landscape requirements (letter from Landscape Architect may be required)
        - P.D. or S.U.P. requirements
    g. Other permits required
        - Construction trailers
        - Fire sprinkler system (brochure attached)
        - Lawn sprinkler system
        - Fences
        - Signs/banners
    h. Customer surveys
        - Provides Building Inspection vital feedback. Please complete and return
            - Plan Review operations
            - Field Inspection operations
    i. Project manager must set Pre-C.O. at this meeting, 30 days before projected building final
    j. Open forum for questions/answers/other specific comments

Building Inspection

I.V.R.
for
Commercial Buildings

972-466-3370

In an effort to streamline our operations and improve customer service, Development Services Building Inspection division has implemented an Interactive Voice Response (IVR) system.

HOW IT WORKS

To use the IVR System, simply dial:

972-466-3370

Follow the simple instructions; available 24 hours a day, 7 days a week, 365 days a year.

WHAT YOU WILL NEED

1. A touch-tone telephone
2. A site-specific Permit Number
3. Inspection Code (see list)

You will be prompted through the entire process. Press [*] at any time for more information on how to use the system.
To return to the previous menu at any time press the [#] key.

CHOOSE YOUR OPTION

When you call the IVR System you will hear the main menu choices:

Press [1]	Schedule an Inspection
Press [2]	Cancel/Reschedule an Inspection
Press [3]	Obtain Inspection Results
Press [4]	Directions to the Office and Office Hours
Press [0]	Transfer to Staff
Press [*]	Additional Information

Hours of Operation

Office 7:30 am to 5:30 pm; Mon-Thurs
7:30 am to 11:30 am; Fri

Field 7:00 am to 4:30 pm; Mon-Thurs
7:00 am to 11:00 am; Fri
(No inspections Friday afternoon)

General Information
Phone 972-466-3225 Fax 972-466-3220

24-Hour Inspection Requests Hotline
972-466-3370

To schedule an after-hour inspection
(Call during business hours)

Bill Pitmon 972-466-3242
Construction Inspector

Ray Jackson.....972-466-3217
Chief Building Inspector

Rey Guerrero.....972-466-5752
Chief Building Inspector

Aaron McLendon 972-466-3216
Senior Building Inspector

David C. Garcia.....972-466-3238
Building Inspector

Billy McMahon 972-466-3249
Inspection Services Coordinator

Lorri Dennis 972-466-9821
City Arborist

Tony Vo 972-466-3247
Permit Process Supervisor

Brett King.....972-466-3157
Building Official

Ravi Shah 972-466-3245
Director of Development Services

NEW BUILDING INSPECTIONS

Building Foundation..... 2001
Building Rough/Framing..... 3040
Building Work Final..... 4040
Electrical Ceiling Rough 3011
Electrical Rough..... 3010
Electrical Service..... 1010
Electrical Wall Rough 3012
Electrical Under Floor..... 2010
Electrical Work Final 4010
Foundation Pre-Pour 1902
HVAC Insulation after Rough..... 3034
HVAC Rough..... 3030
HVAC Work Final 4030
Insulation..... 3067
Landscape Final..... 4035
Moisture Barrier 3045
Night Zoning/Glare Ordinance..... 4036
Paving Fire Lane 1052
Plbg Gas Rough & Test..... 3021
Plbg Grease/Sand Interceptors 2022
Paving Site/Parking Lot 1053
Plbg Rough/Setback/Commercial 2025
Second Level Foundation/Pier 2002
SWPPP Final..... 4038
Third Level Foundation/Pier changes inside
..... 2003
Temporary Electrical Pole & Storm Water
Mgmt Program 1011
Zoning/P.D./SUP Final 4037

CONSTRUCTION INSPECTIONS

Brick Pavers Installation on B.F.R..... 1057
Drainage/Storm Inspection
(private property)..... 1054
Drive approach R.O.W..... 5020
Median Opening R.O.W..... 1102
Onsite Paving inspection..... 1058
Plbg Sewer..... 1021
Plbg water meter vault R.O.W. 2045
R.O.W. Infrastructure Final (L.O.N.)... 5050
Right of Way Sewer R.O.W..... 5040
Right Turn Lane R.O.W..... 1101
Sewer Tap R.O.W. 2051
Sidewalk in R.O.W..... 5010
Site Drainage/Grading (*form letter from engineer*)..... 9900
Storm Drain Inspection R.O.W. 1055
SWPPP Final..... 4038
Traffic Barrier Protection R.O.W..... 1100
Water in R.O.W./Easement in R.O.W.. 5030
Water Meter Pre-install, R.O.W..... 1028
Water Service Tap R.O.W..... 1022
Water Test in R.O.W..... 1040

MISCELLANEOUS CONSTRUCTION

Fence Inspection 1090
Retaining Wall 1041
Sign, Pier/Setback/Electric Underground 1091
Sign Final 4041
Wall Sign Final 4045

LAWN SPRINKLER

Irrigation B.F.P. & Final 1024
Irrigation B.F.P. Replacement 1023

CONSTRUCTION TRAILER/SALES TRAILER

Temporary Electric Pole 1011
Plumbing Rough 2025
Building Final 4040

NOTE: Off-street parking must be in place before all utilities are released.

COMMERCIAL KITCHEN HOOD

Hood Rough - Building Inspection 3031
Hood Final - Fire Inspection 4031

TEMPORARY HEAT (**GAS/ELECTRIC**)

Electric (application & fee required) 6015
Gas test & connection to furnace (application & fee required) 6020
Gas and Electric (application & fee required) 6060

SPECIAL INSPECTION

Pre-brick (fee required) 3042

AFTER HOUR INSPECTIONS

Please call Building Inspection during regular hours to schedule inspections at 972-466-3225.

NOTE: Contact Fire Prevention at 972-466-3210 for fire sprinkler inspections and fire alarm inspections.

Verification Letter

Section 104.4 (International Building Code)

The Building Official may require other inspections of any construction work to ascertain compliance with codes or laws enforced. A standard form is provided below. Where the verification is for confirmation of an "engineered designed" installation, the letter must be signed by a Texas Professional Engineer.

The standard form may also be used for certain sites where the owner's representative has chosen to provide their own inspection progress or on a case by case basis where uncertainty exists.

(Suggested language for verification letter)

Date

City of Carrollton
Building Inspection
1945 E. Jackson Road
Carrollton, Texas 75006

RE: Property name, address and permit number

A representative of this company has visited the site shown above and verified that the:

- Structural design installations
- Site paving, grading, drainage and detention pond
- Foundation system and related piping items
- Ordinance required landscaping

is/are installed in accordance to the drawing and details submitted to the city with the permit application.

Signature
Printed name, title (applicable state I.D. number)

Foundation Engineered Form Letter

(Suggested language for foundation and/or pier confirmation)

Date

Engineer's name
Company name
Street address
City, state, zip code

RE: Property name
Street address of project
Permit number
City, state, zip code

A representative of this company visited the site at the referenced address and inspected the foundation according to the City-approved Engineering drawings and details, and verified that all such details are met and the setup meets the requirements of Chapter 18 of the 2012 International Building Code, Chapter 4 of the 2012 International Residential Code, and Chapter 2, Article 250.50 of the 2011 National Electric Code. The foundation system and any plumbing, mechanical or electrical items within the foundation system are compatible and do not adversely affect or cause damage to each other.

Registered engineer's signature: Registered engineer’s seal:

_____

Date: _____

Site Paving Engineered Form Letter

(Suggested language for site paving confirmation)

Date

Engineer's name
Company name
Street address
City, state, zip code

RE: Property name
Street address of project
Permit number
City, state, zip code

A representative of this company visited the site at the above referenced address and has verified that the site paving complies with the city approved plans and details.

Registered engineer's signature: Registered engineer's seal:

_____

Date: _____

Site Drainage Detention Pond Confirmation Engineered Form Letter

(Suggested language for site drainage-detention pond)

Date

Engineer's name
Company name
Street address
City, state, zip code

RE: Property name
Street address of project
Permit number
City, state, zip code

A representative of this company visited the site at the above referenced address and has verified that the final grading, site drainage, storm run-off, and detention pond comply with the City approved plans and details.

Registered engineer's signature: Registered engineer's seal:

_____

Date: _____

MAINTENANCE BOND

KNOW ALL MEN BY THESE PRESENTS:

THAT, _____ whose address is _____, as PRINCIPAL, and _____ a CORPORATION organized and existing under the laws of the State of _____, and fully authorized to transact business in the State of Texas, as Sureties, do hereby expressly acknowledge ourselves to be held and bound to pay unto the City of Carrollton, Texas, hereinafter called CITY, a municipal corporation organized and existing under the laws of Texas, at Carrollton, Dallas County, Texas, the sum of _____Dollars ($_____) in lawful money of the United States, for the payment of which sum will and truly to be made unto said City of Carrollton, and its successors, said PRINCIPAL AND SURETIES do hereby bind ourselves, our heirs, executors, administrators, their assigns and successors, jointly and severally, firmly by these presents. This bond shall automatically be increased by the amount of any increase in the work to be performed, but in no event shall there be a decrease in the sum of this Bond.

THIS obligation is conditioned, however, that whereas said _____ has this _____day of _____, 20___, undertaken a project to build and construct _____, located in the City of Carrollton, Texas, pursuant to the ordinances of the City which ordinances are hereby expressly made a part hereof as though the same were written and embodied herein.

WHEREAS, PRINCIPAL binds itself to use of materials and methods of construction such that all improvements including but not limited to _____ will be initially completed free of perceptible defects and will remain in good repair and condition and free of perceptible defects for and during the period of two (2) years after the date of acceptance of the completed improvements by the CITY, and

WHEREAS, said PRINCIPAL binds itself to construct said improvements in such a manner and obtain inspection approvals in proper sequence as are required to obtain acceptance by the CITY and to repair or reconstruct the said improvements in whole or in part at any time within said two (2) years period to such an extent as the CITY deems necessary to properly correct all defects except those which have been caused by circumstances and conditions occurring after the time of construction over which the PRINCIPAL had no control and which are other than those arising from defect of construction by the PRINCIPAL; and,

WHEREAS, after the acceptance of the improvements by the CITY, said PRINCIPAL binds itself, upon receiving notice from the CITY of the need thereof to repair or reconstruct said improvements and if the PRINCIPAL fails to make the necessary corrections, within ten (10) days after being notified, the CITY may do or have done all said corrective work and shall have recovery hereon for all expenses thereby incurred.

WHEREAS, under the ordinances of the CITY, it is provided that the PRINCIPAL will maintain and keep in good repair the work herein contracted to be done and performed for a period of two (2) years from the date of acceptance; it being understood that the purpose of this section is to cover all defective conditions arising by reason of defective material, work, or labor performed by said PRINCIPAL; and in case the said PRINCIPAL shall fail to do so, within ten (10) days after being notified, it is agreed that the CITY may do said work and supply such materials, and charge to same against the said PRINCIPAL, and SURETIES, on this obligation, and said PRINCIPAL AND SURETIES hereon shall be subject to the liquidated damages mentioned in said contract.

NOW THEREFORE, if the said PRINCIPAL, shall keep and perform the requirement of the ordinance to maintain said work and keep the same in repair for the said maintenance period of two (2) years, as provided, then these presents shall be null and void, and have no further effect, but if default shall be made by the said PRINCIPAL in the performance of his contract to so maintain and repair said work, then these presents shall have full force and effect, and said CITY shall have and recover from said PRINCIPAL and SURETIES damages in the premises, as provided, and it is further agreed that this obligation shall be a continuing one against the PRINCIPAL and SURETIES hereon, and that successive recoveries may be had thereon for successive breaches until the full amount shall have been exhausted; and it is further understood that the obligation herein to maintain said work shall continue throughout said maintenance period, and the same shall not be changed, diminished, or in any manner affected from any cause during said time.

PROVIDED FURTHER, that if any legal action be filed upon this Bond, exclusive venue shall lie in Dallas County, State of Texas.

AND PROVIDED FURTHER, that the said Surety, for value received, hereby stipulates and agrees that no change, extension of time, alteration or addition to the terms the Work to be performed thereunder or the specifications accompanying the same shall in anyway affect its obligation on this Bond, and it does hereby waive notice of any such change, extension of time, alteration or addition to the terms of the Work or to the Specifications.

This Bond complies with the provisions of Chapter 2253, Texas Government Code, and any other applicable statutes of the State of Texas.

The undersigned and designated agent is hereby designated by the Surety herein as the Resident agent in Dallas County to whom any requisite notices may be delivered and on whom service of process may be had in matters arising out of such suretyship, as provided by Article 7.19-1 of the Insurance Code, Vernon's Annotated Civil Statutes of the State of Texas.

IN WITNESS WHEREOF, the said _____ has caused these presents to be executed by them; and the said _____ _____has caused these presents to be executed by its ATTORNEY-IN-FACT _____ and the said ATTORNEY-IN-FACT _____ has hereunto set his hand this the _____ day of _____, 20___.

_____	_____
Principal	Surety
By:_____	By: _____
_____	_____
Print or Type Name	Print or Type Name
Title:_____	Title: _____
Address: _____	Address: _____
_____	_____

The name and address of the Resident Agent of Surety is:

_____

_____

Certificate of Occupancy Guide

The following required inspections must be approved before a Certification of Occupancy can be issued.

Inspection	Description
1024	Irrigation B.F.P. & Final
4010	Electrical work final
4020	Plumbing work final
4030	HVAC work final
4002	Fire Marshal final
4022	Backflow prevention certification
4035	Landscape/screening wall final or contractor's letter of completion date required
9900	Site drainage/paving grade (contractor's engineer's letter required
5050	R.O.W. infrastructure final (letter of notification)
4037	Zoning/S.U.P. /P.D. Final
4038	SWPPP Final
4041	Sign Final (if applicable)
4040	Building/energy final

Note: If an elevator is installed, then a State Inspection and approval of the elevator is required.

EXCEPTIONS:

The Inspector/Project Manager may approve AREAS for storage, shelving, stocking items and racking at their discretion when life safety items are adequate and log such areas on an Inspection #7000 ticket. (Do not close out the permit).

CARROLLTON
TEXAS

LANE CLOSURE IN R.O.W.

This section office use only					
Application #		Receipt #			
Cash ☐		CC ☐		Phone order ☐	
Check #		Balance due			
Permit type		Plan #		TIFF #	

Permit no.	
Project name	
Address	
Description	
Mapsco	
Contractor	
Phone/Fax	
Email	
Superintendent	
Phone/Fax	
Email	
Start date	
Completion date	
NOTE: This notice must be in Building Inspection no later than Wednesday of week prior to proposed lane closure in R.O.W.	

Complete and fax to Building Inspection at 972-466-3220 or bring to 1945 E. Jackson Rd.

To be completed by the construction inspector in Building Inspection Department			
Project Manager		Phone	
Construction Inspector		Phone	
Date Received			
Date sent to Public Works			
Copy: Project Files, Construction Inspector, Project Manager			

ORDINANCE NO. 3201

AN ORDINANCE OF THE CITY OF CARROLLTON, TEXAS, AMENDING SECTIONS 130.18 (A) (5) (6) AND (7)OF THE CITY OF CARROLLTON CODE TO STANDARDIZE LANGUAGE TO DESCRIBE MOTOR VEHICLES; AMENDING SECTION 130.18 (A) (7) TO PROHIBIT UNECESSARY ACCELERATION OR RACING OF MOTOR VEHICLES OR MOTOR VEHICLE ENGINES TO CREATE A LOUD NOISE ADJACENT TO OR IN A SINGLE OR MULTI-FAMILY RESIDENTIAL AREA; AMENDING SECTION 130.18 (A) BY THE ADDITION OF SUBSECTION TO 130.18 (A) (8) TO PROHIBIT THE USE OF CONSTRUCTION EQUIPMENT OR MACHINERY IN RESIDENTIAL AREAS DURING CERTAIN TIMES ON MOST WEEKDAYS AND SATURDAYS; AMENDING SECTION 130.18 (A), BY THE ADDITION OF SUBSECTION TO 130.18 (A) (9) TO PROHIBIT THE USE OF CONSTRUCTION EQUIPMENT OR MACHINERY IN RESIDENTIAL AREAS DURING CERTAIN TIMES ON MOST SUNDAYS AND CERTAIN HOLIDAYS; AMENDING SECTION 130.18 (B) TO PROVIDE FOR AFFIRMATIVE DEFENSES INSTEAD OF EXCEPTIONS; AMENDING SECTION 130.18 (B) (3) TO CLARIFY WHEN AMPLIFICATION EQUIPMENT AND SOUNDS MAY BE USED FOR CERTAIN CITY APPROVED FUNCTIONS; AMENDING SECTION 130.18 BY THE ADDITION OF SUBSECTION (C) PROVIDING THAT A CULPABLE MENTAL STATE IS NOT REQUIRED FOR COMMITTING AN OFFENSE THEREUNDER; PROVIDING FOR A PENALTY OF $500; PROVIDING FOR SAVINGS, REPEAL, SEVERABILITY, AND AN EFFECTIVE DATE.

NOW, THEREFORE, BE IT ORDAINED BY THE CITY COUNCIL OF THE CITY OF CARROLLTON, TEXAS:

Section 1.

CHAPTER 130.18: UNLAWFUL NOISE

GENERAL PROVISIONS

§ Sec. 130.18. Unlawful Noise.

(A) *Certain noises prohibited.* It shall be unlawful for any person to make, cause to be made, or allow any loud, disturbing or unnecessary noise in the city which is offensive to the ordinary sensibilities of any individual in the city, which noise renders the enjoyment of life or property uncomfortable, or interferes with the public peace and comfort. The following acts are declared to create loud, disturbing and unnecessary noises in violation of this section:

(1) Operating or permitting to be operated any radio receiver set, musical instrument, television, phonograph, stereo, drum machine or other such device in a manner that unreasonably disturbs or interferes with the peace, comfort and repose of people of ordinary sensibilities in the vicinity.

(2) Operating or permitting to be operated any loudspeaker or sound-amplifying equipment in a fixed or movable position mounted on any vehicle in or upon any street, alley, sidewalk, park, place or public property, or in any building or any premises in the city, whereby the sound therefrom is cast directly upon a public street

or which is so placed or operated that the sounds therefrom can be heard to the annoyance of travelers on any streets or public places, or of persons in the neighboring premises.

(3) Operating of model aircraft, boats, vehicles or other such devices powered by internal combustion or other loud engines, whether tethered or not, within 1,000 feet of a residential area between the hours of 10:00 p.m. and 7:00 a.m. the following day.

(4) The sounding of any horn or signal device on any automobile, motorcycle, bus or other vehicles except as a danger signal, and as may be required by law if another vehicle is backing, starting or turning such a way as to likely cause a collision.

(5) The use of any motor vehicles so out of repair or so loaded, which emits or creates loud or unnecessary grating, grinding or rasping noise.

(6) The discharge into the open air of the exhaust of any motor vehicle except through a muffler, or other device, which will effectively and efficiently prevent loud and unusual noises.

(7) The unnecessary continuous acceleration or racing of a motor vehicle or motor vehicle engine, creating a loud noise adjacent to or in a single or multi-family residential area.

(8) The operation of construction equipment or machinery within 1,000 feet of any residence any time except during the hours between 6:00 a.m. and 8:00 p.m. on weekdays and 8:00 a.m. to 7:00 p.m. on Saturdays.

(9) The operation of construction equipment or machinery within 1000 feet of any residence on Sundays and the following holidays, regardless of the day of week:

a. New Year's Day
b. Memorial Day
c. Independence Day
d. Labor Day
e. Thanksgiving Day and the following Friday
f. Christmas Day

(B) *Affirmative Defenses.* It is an affirmative defense to prosecution under this Section that:

(1) Amplifiers are used on vehicles operated by ice cream and snow cone vendors to produce jingles or music to attract children as patrons. However, such amplified jingles or music shall not be produced by such vendors in a loud manner offensive to the ordinary sensibilities of inhabitants of the city or in such a manner so as to interfere with public peace and comfort. Nor shall such amplified jingles or music be produced between sunset and 8:00 a.m. on the following morning.

(2) Noise is caused in the performance of emergency or public service, including police, fire and public utility operations, acting in the performance of lawful duties to protect the health, safety or welfare of the community.

(3) Noise occurs between the hours of 8:00 a.m. to 11:00 p.m. and is caused by the use of amplification equipment or sounds created at official municipal functions, parades approved by the City, events occurring at the Carrollton Amphitheater as a municipal

function, or the use of amplification equipment in conjunction with functions or events for which a Special Event Permit has been issued under City Ordinance Chapter 117.

(C) *Culpable mental state not required.* Neither allegation nor evidence of a culpable mental state is required for the proof of an offense defined by this subsection (A) of this Section.

Section 2.

§ 50.99 PENALTY.

Any person who violates any provision of this chapter shall be subject to a fine not to exceed five hundred dollars ($500.00). Each day in which a violation of this chapter exists shall constitute a separate offense.

Section 3.

That save and accept as amended by this ordinance, Chapter 130 shall remain in full force and effect.

Section 4.

That all ordinances or parts of ordinances in conflict with this ordinance are specifically repealed.

Section 5.

That the provisions of this ordinance are severable in accordance with §10.07 of the Carrollton City Code.

Section 6.

That this ordinance shall take effect on and after its date of passage.

DULY PASSED AND APPROVED by the City Council of the City of Carrollton, Texas this ____ day of _____, 2008.

CITY OF CARROLLTON, TEXAS

Becky Miller, Mayor

ATTEST:

Ashley Mitchell, City Secretary

APPROVED AS TO FORM:

Clayton Hutchins, City Attorney

APPROVED AS TO CONTENT:

David N. James, Chief of Police

Ravi Shah, Director of Urban Development

GUIDANCE DOCUMENT FOR SIZING AND INSTALLATION OF GREASE TRAPS AND INTERCEPTORS

Part I: Guidance for Grease Trap Sizing and Design Criteria

A. Introduction

The City of Carrollton requires grease traps or interceptors in commercial food establishments to prevent the entry of grease, fats, oils and debris into the city's sanitary sewer system. These substances cause sewer back-ups, blockages, and sanitary sewer overflows.

The traps use the physical principal that fats, oils and grease are lighter than water and will rise to the top of a water surface and heavy debris will fall to the bottom of the trap when the mixture is allowed to stand for a period of time in quiet conditions. The longer the wastewater stays in the trap, the better the separation. But as the amount of retained grease and solids increase, the effective volume of the trap decreases, retention time decreases and physical separation decreases, resulting in pass through of solids, fats, oils and grease. To prevent this, grease traps and interceptors have to be regularly maintained by having a permitted liquid waste hauler remove both the top grease layer and the bottom solids.

Size, type, and location of grease traps shall be in accordance with the manufacturer's instructions and the requirements of City of Carrollton ordinances.

B. Applicability

The requirements contained in this guidance document are applicable to all commercial food service establishments, including those that are undergoing:

1. New construction
2. Interior remodeling to accommodate expansion or operational modifications
3. Changes of ownership/occupancy
4. Facilities which may be experiencing difficulty in achieving compliance with maintenance and/or wastewater discharge limitations

C. Sizing Requirements

Sizing methods described herein are intended as guidance in determining grease trap/interceptor sizes that will provide a minimum degree of protection against grease and other materials that cause blockages in the City's sanitary sewer system. Sizing determinations are based on operational data provided by business owners or their contractors. In approving a customer's plumbing or grease interceptor design, the City does not accept liability for the failure of a system to adequately treat wastewater to achieve effluent quality requirements.

Minimum acceptable grease trap/interceptor sizing shall be accomplished based on the type of food service or level of food preparation as defined in the City of Carrollton Food Establishment Policy, Oct. 2007 Revision.

a. No food preparation: a grease trap/interceptor requirement.
b. Light food preparation: A <u>minimum</u> of a 500-gal. Grease interceptor with at least two baffles. There is no current requirement for a sampling well.

c. Heavy food preparation: A minimum of a 1000-gal. Grease interceptor with at least two baffles.

D. Alternative Proposals:

Alternate devices for grease removal (i.e. Great Basin, Trapzilla, Big Dipper, etc.) shall be approved on an individual basis by Environmental Services through a variance letter, and will be subject to monitoring for its effectiveness.

Subject to specific best management kitchen practices, set-up and maintenance procedures, the city is currently allowing the following alternative FOG pretreatment devices for specific food establishments:

a. No food preparation: No grease trap/interceptor requirement.
b. Light food preparation:
   1. Great Basin Model No. GB-75
   2. Trapzilla Model No. TZ-600
c. Heavy food preparation:
   1. Great Basin Model No. GB-250
   2. There is no acceptable Trapzilla equivalent.

E. Construction/Installation:

All permitting, construction, and inspection activities must be completed in accordance with the City of Carrollton Plumbing Code. Additionally, the following specifications must be incorporated into grease trap design.

a. The standard grease interceptor shall be constructed with a minimum of two baffles.
b. Grease interceptors are to be installed at a distance of 8-10 meters from the last contributing fixture to allow for adequate cooling of the wastewater, while preventing grease solidification in the lines. Water temperatures must be less than 110 degrees Fahrenheit prior to entering grease trap.
c. All grease bearing waste streams, such as: three-compartment sinks, pot/pan sinks, soup kettles, hand-washing sinks, dishwashers, mop sinks and floor drains should be routed through an appropriate grease trap/interceptor. *Notable Exceptions:* Drains that receive "clear waste" only, such as from ice machines, condensate from coils and drink stations, may be plumbed to the sanitary system without passing through the grease interceptor with the condition that the receiving drain is a "hub" type that is a minimum of two inches above the finished floor.
d. Sampling Wells. All exterior or recessed Grease Traps and Interceptors of a thousand gallon or more capacity are to be installed with an Effluent Sampling Well, equivalent to: a. Parks Environmental Equipment Company, *2010 Sample Well Drawing SWB-2*; b. PW Eagle WAC-15 or CSC-15*;* or c. Uponor *Sample Well*. Sample wells will have a 15" diameter access cover and a minimum 4" drop from inlet to outlet piping through the sampling well. Mechanical Grease Traps and Interceptors that are installed above ground must be equipped with an influent flow regulator and an effluent valve assembly that allows for sample collection.

All alternative grease interceptors, regardless of size, are to be installed with corresponding effluent sampling wells for monitoring purposes.

e. Grease interceptors and lids must be graded to handle vehicular traffic.

F. Customer (Generator) Responsibilities:

It is the responsibility of the customer (waste generator) to ensure compliance with the City of Carrollton's discharge limitations specified in Chapter 171, Industrial Wastewater, and grease trap maintenance in Chapter 172, Liquid Waste, of its Code of Ordinances.

Hazardous wastes, such as acids, strong cleaners, pesticides, herbicides, paint, solvents, or gasoline should not be disposed of where they would go through grease or grit traps.

If commercial dishwashers are discharged through a grease interceptor, care must be taken in system design. Dishwashers use detergents and elevated water temperatures that will melt grease. If the interceptor is either too small or too close to the commercial dishwasher, grease may pass through the interceptor and into the collection system.

Generators are responsible for maintaining grease traps in continuous proper working condition. Further, generators are responsible for inspecting, repairing, replacing, or installing apparatus and equipment as necessary to ensure proper operation and function of grease traps and compliance with discharge limitations at all times.

The generator must have grease traps serviced (pumped, cleaned, and inspected) by a City of Carrollton permitted liquid waste hauler, at a minimum frequency to ensure proper function. Records of grease interceptor maintenance are required to be maintained on site for at least three (3) years.

Enzymes, solvents, and emulsifiers are not permitted as these will only change the form of grease, allowing it to be carried out of the trap with the wastewater and deposited in the collection system. Biological treatment systems must be pre-approved by the Environmental Services Department. These systems <u>will not</u> alleviate the necessity for inspection and proper maintenance.

Part II: Other Types of Interceptors and Sizing Requirements

Interceptors are required for oil, grease, sand and other substances harmful or hazardous to the building drainage system, the public sewer or sewage treatment plant. A licensed plumbing contractor or professional engineer must submit the design, size and location of pretreatment devices to the City for review and approval.

A. Laundries

Typical applications include commercial/institutional Laundromats and dry-cleaners. The waste discharge from these facilities usually contains high quantities of lint, silt, dissolved and suspended solids, as well as detergents.

A lint interceptor is commonly referred to as a “lint trap”, typically located outside of the building and buried below grade. The principal advantage is the cooling effect obtained by the earth. The buried interceptor is typically constructed of precast concrete, providing years of continuous service. The interceptor contains several compartments where the lint will coagulate and float to the surface and heavier solids will sink to the bottom. The discharging effluent comprises of the clearer water between these layers. Inlet and outlet piping shall be a minimum of four (4”) inches or the size of the building sewer whichever is greater. In traffic areas, the trap shall be designed to have adequate reinforcement and cover (including piping), meeting HS-20 traffic loading specifications. Lint traps in traffic areas require a concrete driving surface over piping with structural backfill around piping.

Maintenance. The lint interceptor should be cleaned (or pumped out) routinely to prevent the escape of appreciable quantities of grease. Cleaning should be performed when the interceptor is at 75% of lint/silt retention. The frequency of cleaning at any given installation will vary depending on use. Pumping frequencies for Laundromats usually range from once a month, to once very six months.

Sizing criteria. The different variables include: number of washing machines, wastewater flow rate, wastewater detention time, and storage factor and detention time.
Commercial laundries, laundromats, and dry-cleaners shall be equipped with an interceptor in order to reduce the quantity of lint and silt that enters the collection system. The system must be of adequate size and design to allow for cool-down of wastewater so that separation can be more readily achieved. In addition, the interceptor must be “equipped with a wire basket or similar device, removable for cleaning, that prevents passage into the drainage system of solids 0.5 inch (12.7 mm) or larger in size, string, rags, buttons or other materials detrimental to the public sewerage system”. (1003.6 International Plumbing Code 2012).

Sizing must be in accordance with guidance found in the Uniform Plumbing Code (UPC), Appendix H which uses the following formula:

(TGC) x (CPH) x (RT) x (ST) = Size of Lint Interceptor (gallons)

Where:
TGC = Total Gallons per Cycle
CPH = Cycles per hour
RT = Retention time
2.5 for Institutional Laundry
2.0 for Standard Commercial Laundry
1.5 Light Commercial Laundry
ST = Storage Factor, based on hours of operation;
1.0 for 8 hours of operation
1.5 for 12 or more hours
Currently, no effluent sample well is required for small commercial laundries. However, large and/or industrial laundries may be subject to Federal Pretreatment regulations. For more information please contact the City of Carrollton, Industrial Pretreatment Program at (972) 466-3060.

B. Car Washes

For commercial car washes, separators shall have a minimum capacity of 1000 gallons for the first bay, with an additional 500 gallons of capacity for each additional bay.

Wash racks must be constructed to eliminate or minimize the impact of run-off from rain/storm events. Minimum requirements are roofed structures with at least two walls and appropriate grading to prevent stormwater infiltration into the sanitary sewer.

An effluent sampling well shall be required.

C. Automotive Repair Facilities (Garages and Service Stations)

Automotive repair shops which include a floor drain in its areas of operation shall be required to design, install and maintain a grit trap/oil separator, with a minimum capacity of 50 gallons for the first 100 square feet of area to be drained, plus 1 cu. ft (7.5 gals) for each additional 100 sq. foot of area to be drained into the separator.

An effluent sampling well shall be required.
Figure 1, Typical Kitchen Plumbing Layout

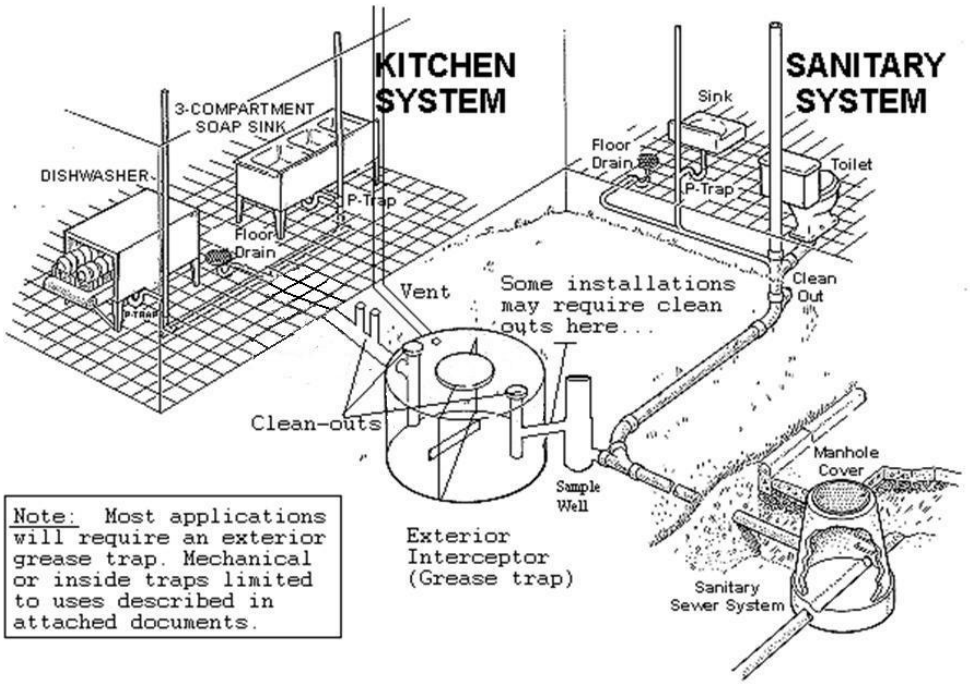

Figure 2, Typical Grease Interceptor Schematic

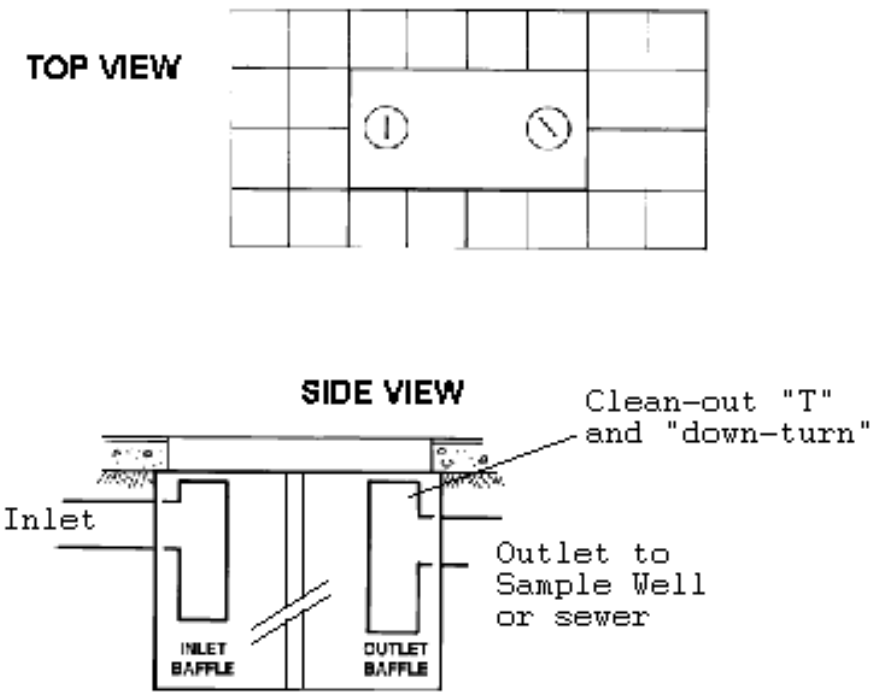

Figure 3, Typical Sampling Well

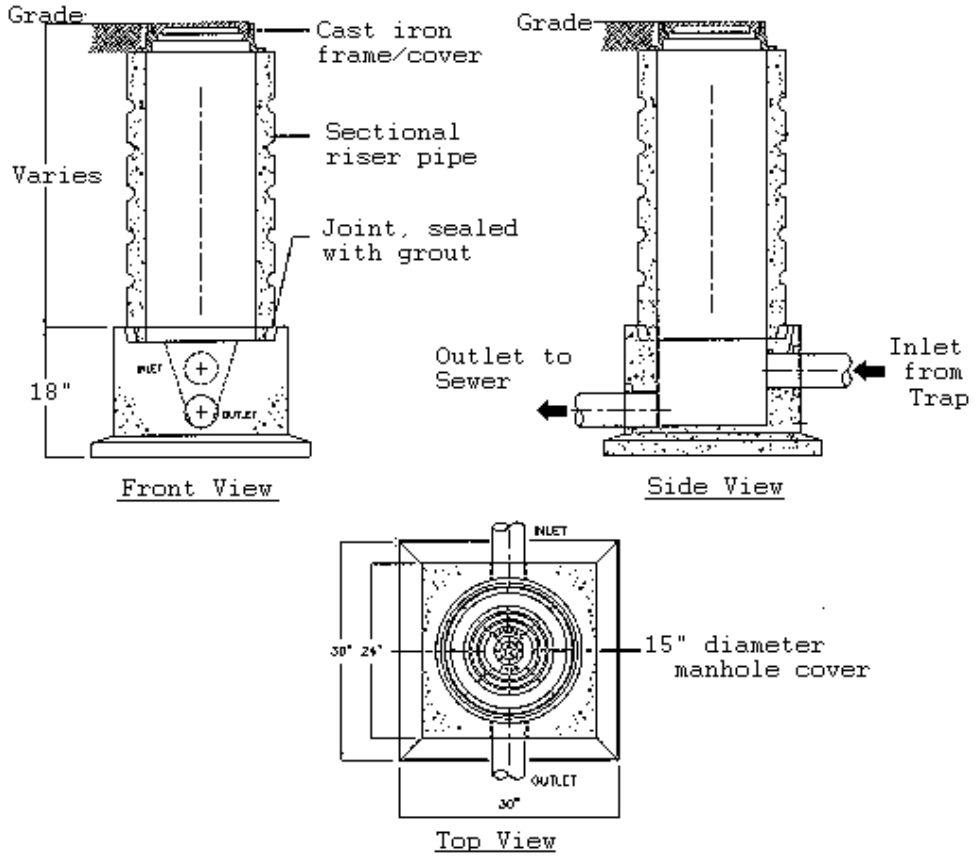

Figure 4: Typical Grease Trap and Sample Well Installation

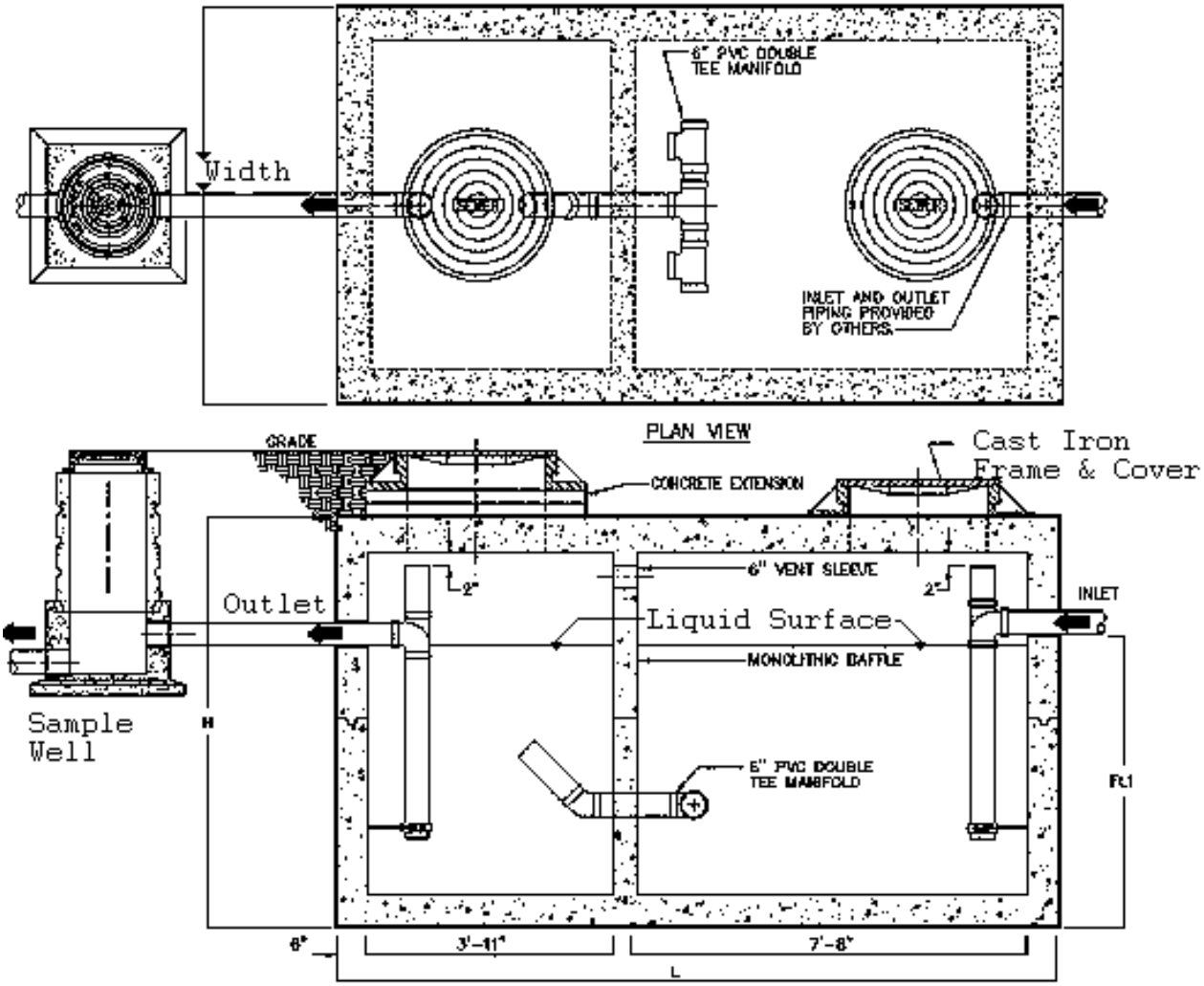

Commercial Drive Approach Inspection Checklist

General Design Standard

Section #2I4 and 010 General Notes A Section 2-J2, Section 10E2, Section 2-6
GDS Paving Details P-15, P-11, P-12

- Inspector to use the detail sheets from the GDS for a guide when making inspection (leave copy of detail with contractor)
- BFR must comply with GDS over state and federal regulations
- Always read the plans for location, and planning for BFR
- Present the BFR description from GDS, in the preconstruction meeting. Utilize this check list when construction requires barrier free ramps
- The ramp and the landing are to be constructed prior to sidewalk
- The landing is the first section of sidewalk that adjoins the ramp
- **Place 4" redwood at the end of the landing prior to sidewalk.** (There is to be no space between the bottom of the redwood and the top of the ground.)
- Install #4 smooth dowels in the redwood. Support on chairs. **Do not** tie to the rebar
- Form for ramp truncated pavers and concrete should be 8" from the top of the form to subgrade
- Ramp is set at 1" per 12" for ramp, and ¼" per foot on the landing
- Maximum slope for the ramp is 1:12. This only applies to the ramp
- The landing is 2% (1/4") slope for the 5 foot landing
- Use a four foot level to verify slope on the forms. Laser level may be acceptable. Use a straight edge if longer than what a four foot level can accurately work
- Ramp shall be tied into the street or drive approach. With two #3 deformed dowels Refer to GDS P-18 6 of 6. Also refer to GDS P-17 2 of 2 for tying into street/approach
- Install #3 deformed in the area to be poured for the landing and the concrete below the ramp and concrete between ramp and street or approach
- The barrier free ramps are set up separately from the drive approach or street. **Monolithic pour is not allowed**
- Arrange with streets and the contractor to do a forms inspection
- Once forms are approved, concrete may be poured

- Use 5 sack, 3000 # psi in pour. All concrete must be vibrated
- Install tool joints at all four corner parallel with the front and back form
- When forms are pulled, there will be a formed concrete pocket for pavers. (See GDS P-18, page 6 of 6. This also provides the color requirements)
- A sand cement mix is placed in the opening where pavers are to be placed. Set pavers, per GDS P-18 5 0f 5, in a basket weave pattern
- Fill top spaces with sand. **Do not use cement mix here. Use sharp sand only on top fill**
- Level all pavers. No high spots or low spots **No stress cracks are allowed in any portion of the concrete**
- The length of the ramp may vary depending upon available space and the elevation of the proposed or existing sidewalk, and the radius of the drive
- All the barrier free ramps and the landings are to be formed first and forms inspected and approved by Public Works and Building Inspection prior to concrete pour and placing of the pavers. A follow-up inspection may be required and must be approved prior to release. The BFR contractor must be on site during the forms inspection prior to any pours of the ramps and the sidewalk, and the contractor must be present during the final inspections
- **The inspector is to obtain a pour schedule, once approved, and be on site during the pour**
- Obtain a final inspection from Streets Dept.

The purpose of this checklist is to **provide a guideline**. All work must meet the GDS. Anything special must be approved by Public Works in writing or email.

BFR Check List Rev: 8/31/05
BFR Check List Rev: 2/28/06
BFR Check List Rev: 4/27/06

Public Works/Water Utilities
Water Quality/Production Division
2711 Nimitz
Carrollton, Texas 75007
972-466-3425

SUMMARY OF PROCEDURES PRIOR TO INSTALLATION OF BACKFLOW PREVENTERS

All backflow prevention assemblies and approved testers shall be registered with the city's Department of Public Works Water Quality/Production Division. All backflow assemblies shall be a nationally recognized and an approved testable device.

1. **All** backflow assembly installations require compliance with the city's Building Inspection office (a permit is required).
2. **All** testing shall be by Texas Commission on Environmental Quality (TCEQ) approved testers who are registered with the Water Quality/Production Division of the Public Works Department (a list of Carrollton registered testers can be obtained from the Water Quality/Production office at the address listed above).
3. **All** backflow assemblies shall be tested according to TCEQ regulations prior to the permanent activation of the plumbing system and thereafter annually.
4. **All** assemblies shall have plastic or brass caps placed upon all test cocks (NO GALVANIZED PLUGS).
5. **All** backflow prevention assemblies are required to be registered with all fees paid through the Water Utility Bill. **The annual registration fee for each backflow device is $25.00 (this fee will appear on the monthly city water/sewer bill and relates solely to the matters covered in the Ordinance #2336 and are separate from other fees chargeable by the city).**
6. **All** backflow assemblies shall be installed by licensed plumbers, irrigators OR fire sprinkler technicians who meet the requirements of the city's current plumbing code. (All assemblies must be tested after installation by an approved city registered tester. Test reports shall be submitted to the Water Quality/Production Office within 5 working days of the test. (See address above.)
7. **All** testers must register with the Water Quality/Production Division of the Public Works/Water Utilities Department. (An annual non-refundable registration fee of $50.00 payable by check or money order is required.) All testers, plumbers and fire sprinkler technicians must have a current confined-space entry certificate.
8. **Only** City of Carrollton and TCEQ approved backflow test reports will be accepted. All required forms can be purchased at the Water Utilities Department located at 2711 Nimitz Drive. (Bound booklets of 30 test forms can be purchased by either check or money order for $25.00 at the Water Utilities Office.) **No cash will be accepted.**

All installations and testing shall meet requirements of the TCEQ and the ordinances of the City of Carrollton. (There is not a grandfather clause; consequently, there are no exceptions.)

If you have any questions, please contact the Water Quality/Production Division at (972) 466-3425.

Bacteriological Water Sampling Services

Test Results

All sampling results will be available the following business day after 3:00 p.m. Customers are notified of test results by phone and the test report form is mailed or faxed.

Safe drinking water is our top priority!

Pricing

$75.00 per sample

$75.00 per follow-up sample

$30.00 service fee (if sample cannot be collected)

Payment Options:

Check

Money Order

VISA

Effective January 2007

Contact Us Today:

City of Carrollton
Public Works Department
Water Quality/Production
Central Service Center
2711 Nimitz Lane
Carrollton, Texas 75007

Hours: Monday-Friday
7:30 a.m.-4:30 p.m.
(excluding holidays)

Call: 972-466-4205

Fax: 972-466-3429

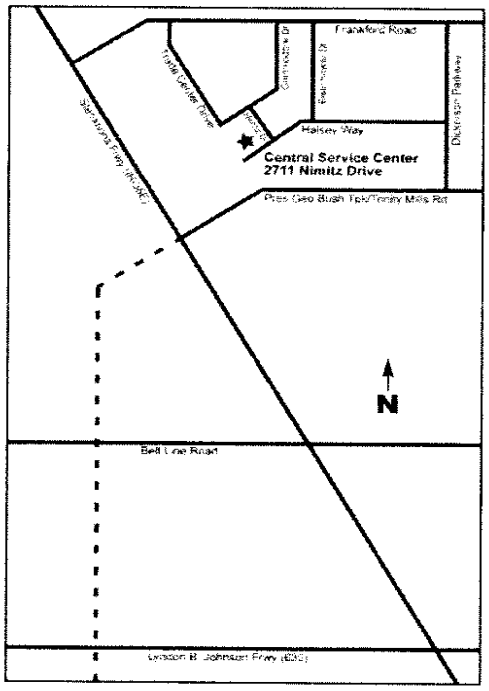

The city's Central Service Center is conveniently located near the President George Bush Turnpike and IH-35E.

Storm Water Pollution Prevention Program

Excerpt from Article 10 Storm Water and Flood Protection Ordinance
Storm Water Discharges from Construction Activities

SECTION A. General Requirements

1. All operators of construction sites shall use best management practices to control and reduce the discharge, to the MS4 and to waters of the United States, of sediment, silt, earth, soil and other material associated with the clearing, grading, excavation, and other construction activities to the maximum extent practicable under the circumstances. Such best management practices shall include, but not be limited to, the following measures as appropriate:

a. Ensuring that existing vegetation is preserved where feasible and that disturbed portions of the site are stabilized as soon as practicable in portions of the site where construction activities have temporarily or permanently ceased. Stabilization measures may include: temporary seeding, permanent seeding, mulching, geotextiles, sod stabilization, vegetative buffer strips, protection of trees, preservation of mature vegetation, and other appropriate measures. Contractor shall submit, as a part of the Best Management Practices, a plan indicating the phasing of site clearing/grading;

b. Use of structural practices to divert flows from exposed soils, store flows, or otherwise limit runoff and the discharge of pollutant from the site to the extent feasible;

c. Minimization of the tracking of sediments off-site by vehicles, the generation of dust, and the escape of other windblown waste from the site;

d. Prevention of the discharge of building materials, including cement, lime, concrete, and mortar, to the MS4 or waters of the United States;

e. Providing general good housekeeping measures to prevent and contain spills of paints, solvents, fuels, septic waste, and other hazardous chemicals and pollutants associated with construction, and to assure proper cleanup and disposal of any such spills in compliance with state, federal, and local requirements;

f. Implementation of proper waste disposal and waste management techniques, including covering waste materials and minimizing ground contact with hazardous chemicals and trash;

g. Timely maintenance of vegetation, erosion and sediment control measures, and other best management practices in good and effective operating conditions; and

h. Installation of structural measures during the construction process to control pollutants in storm water discharges that will occur after construction operations have been completed. Structural measures should be placed on upland soils to the degree attainable. Such installed structural measures may include, but not be limited to, the following; storm water detention structures (including wet ponds); storm water retention structures; flow attenuation by use of open vegetative swales and natural depressions; other velocity dissipation devices; infiltration of runoff on site; and sequential systems which combine several practices. Operators of construction sites are only responsible for the installation and maintenance of storm water management measures prior to final stabilization of the site, and for a period of two years after final acceptance by the City unless the area is disturbed by new owners.

i. The owner will escrow 100% of the cost to provide final stabilization to the site. This escrow shall be held for a period of two years from the date of final acceptance. The deposit of an escrow amount shall not relieve the owner/operator of their responsibility to stabilize the site and remain in conformance with this ordinance and other corresponding regulations. The City shall use the escrow only if the owner/operator fails to stabilize the site in a timely manner.

j. For common drainage locations that serve an area with 10 or more disturbed acres at one time, a temporary (or permanent) sediment basin providing 3,600 cubic feet of storage per acre drained, or equivalent control measures, shall be provided where attainable until final stabilization of the site. The 3,600 cubic feet of storage area per acre drained does not apply to flows from offsite areas and flows from onsite areas that are either undisturbed or have undergone final stabilization where such flows are diverted around both the disturbed area and the sediment basin. For drainage locations which serve 10 or more disturbed acres at one time and where a temporary sediment basin providing 3,600 cubic feet of storage per acre drained, or equivalent controls is not attainable, smaller sediment basins and/or sediment traps should be used. At a minimum, silt fences, or equivalent sediment controls are required for all sideslopes and downslope boundaries of the construction area.

2. Stabilization measures shall be initiated as soon as practicable in portions of the site where construction activities have temporarily or permanently ceased, but in no case more than 14 days after the construction activity in that portion of the site has temporarily or permanently ceased.

a. Where the initiation of stabilization measures by the 14th day after construction activity temporary or permanently cease is precluded by snow cover, stabilization measures shall be initiated as soon as practicable.

b. Where construction activity will resume on a portion of the site within 21 days from when activities ceased, (e.g. the total time period that construction activity is temporarily ceased is less than 21 days) then stabilization measures do not have to be initiated on that portion of site by the 14th day after construction activity temporarily ceased.

3. Qualified personnel (provided by the operator of the construction site) shall inspect disturbed areas of any construction site that have not been finally stabilized, areas used for storage of materials that are exposed to precipitation, structural control measures, and locations where vehicles enter or exit the site, at least once every seven calendar days and within 24 hours of the end of a storm that is 0.5 inches or greater. All erosion and sediment control measures and other identified best management practices shall be observed in order to ensure that they are operating correctly and are effective in preventing significant impacts to receiving waters and the MS4. Based on the results of the inspection, best management practices shall be revised as appropriate, and as soon as is practicable.

4. The City Manager requires any plans and specifications that are prepared for the construction of site improvements to illustrate and describe the best management practices required by paragraph Al1 above that will be implemented at the construction site. The City may deny approval of any building permit, grading permit, site development plan, or any other City approval necessary to commence or continue construction, or to assume occupancy, on the grounds that the management practices described in the plans or observed upon a site inspection

by the City Manager or his representative are determined not to control and reduce the discharge of sediment, silt, earth, soil, and other materials associated with clearing, grading, excavation, and other construction activities to the maximum extent practicable.

5. Any owner of a site of construction activity, whether or not he/she is an operator, is jointly and severally responsible for compliance with the requirements in this Section A.

6. Any contractor or subcontractor on a site of construction activity, who is not an owner or operator, but who is responsible under his/her contract or subcontract for implementing a best management practices control measure, is jointly and severally responsible for any willful or negligent failure on his/her part to adequately implement that control measure if such failure causes or contributes to causing the City to violate a water quality standard or any State-issued discharge permit or discharges from its MS4.

SECTION B. <u>Five-Acre Disturbances</u>

All operators of sites of construction activity, including clearing, grading, and excavation activities, that result in the disturbance of five or more acres of total land area shall comply with the following requirements in addition to those in section A.:

1. Any operator who intends to obtain coverage for storm water discharges from a construction site under the NPDES General Permit for Storm Water Discharges from Construction Sites ("the Construction General Permit") shall submit a signed copy of its Notice of Intent (NOI) to the City Manager at least two (2) days prior to the commencement of construction activities. If the construction activity is already underway upon the effective date of this Ordinance, the NOI shall be submitted within thirty (30) days. For storm water discharges from construction dates where the operator changes, an NOI shall be submitted at least (2) days prior to when the operator commences work at the site.

2. A Storm Water Pollution Prevention Plan (SWPPP) shall be prepared and implemented in accordance with the requirements of the Construction General Permit or any individual or group NPDES permit issued for storm water discharges from the construction site, and with any additional requirement imposed by or under this Ordinance and any other city ordinance. The SWPPP shall be submitted with the engineering plans for the proposed site improvements.

3. The SWPPP shall be prepared, signed, and sealed by a Registered Professional Engineer or Registered Landscape Architect. The signature and seal of the Registered Professional Engineer or Registered Landscape Architect shall constitute his/her attestation that the SWPPP fully complies with the requirements of the Construction General Permit, or with any applicable individual or group NPDES permit issued for storm water discharges from the construction site, and with any additional requirement imposed by or under this Ordinance. The SWPPP shall contain the name, title, and business address of the Registered Professional Engineer or Registered Landscape Architect signing it, and the date he/she does so.

4. The SWPPP shall be completed prior to the submittal of the NOI to the City Manager and, for new construction, during the plan review process with the site development plans. The SWPPP shall be updated and modified as appropriate and as required by the Construction General Permit and this Ordinance. (Any update or modification to the SWPPP shall be prepared, signed, and sealed by a Registered Professional Engineer or Registered Landscape

Architect, if the original SWPPP was required by paragraph B.3 to have been prepared by a Registered Professional Engineer or Registered Landscape Architect).

5. A copy of any NOI that is required by paragraph B.1 shall be submitted to the City in conjunction with any application for a building permit, grading permit, site development plan approval, and other City approval necessary to commence or continue construction at the site.

6. The City Manager may require any operator who is required by paragraph B.2 to prepare a SWPPP to submit the SWPPP, and any modifications thereto, to the City Manager for review. Such submittal and review of the SWPPP may be required by the City Manager prior to commencement of or during construction activities at the site.

7. Upon the City Manager' review of the SWPPP and any site inspection that he/she may conduct, the City may deny approval of any building permit, grading permit, site development plan, or any other City approval necessary to commence or continue construction, or to assume occupancy, on the grounds that the SWPPP does not comply with the requirements of the Construction General Permit, any individual or group NPDES permit issued for storm water discharge from the construction site, or any additional requirement imposed by or under this Ordinance. Also, if at any time the City Manager determines that the SWPPP is not being fully implemented, the City may similarly deny approval of any building permit, grading permit, site development plan or any other City approval necessary to commence or continue construction, or to assume occupancy, at the site.

8. Any significant modification to the SWPPP for a site shall be prepared, signed, and sealed by a Registered Professional Engineer or Registered Landscape Architect as required for the original SWPPP by paragraph B.3.

9. All contractors and subcontractors identified in an SWPPP shall sign a copy of the following certification statement before conducting any professional service identified in the SWPPP.

> I certify under penalty of law that I understand the terms and conditions of the National Pollutant Discharge Elimination System (NPDES) permit that authorizes the storm water discharges associated with the industrial activity from the construction site identified as part of this certification, with the Storm Water and Flood Protection Ordinance of the City of Carrollton, and with those provisions of the Storm Water Pollution Prevention Plan (SWPPP) for the construction site for which I am responsible.

The certification must include the name and title of the person providing the signature; the name, address, and telephone number of the contracting firm; the address (or other identifying description) of the site; and the date the certification is made.

10. The SWPPP, with the Registered Professional Engineer's or Registered Landscape Architect's signature and seal affixed, and the certifications of contractors and subcontractors required by paragraph B.9, and with any modifications attached, shall be retained at the construction site from the date of commencement of construction through the date of final stabilization.

11. The operator shall make the SWPPP and any modification thereto available to the City Manager upon request (as well as to EPA and State inspectors).

12. The City Manager may notify the operator at any time that the SWPPP does not meet the requirements of the Construction General Permit, any applicable individual or group NPDES permit issued for storm water discharges from the construction site, or any additional requirement imposed by or under this Ordinance. Such notification shall identify those provisions of the permit or Ordinance which are not being met by the SWPPP, and identify which provisions of the SWPPP require modifications in order to meet such requirements. Within seven (7) days of such notification from the City Manager or as otherwise provided by the City Manager, the operator shall make the required changes to the SWPPP and shall submit to the City Manager a written certification that the requested changes have been made.

13. The operator shall amend the SWPPP whenever there is a change in design, construction, operation, or maintenance, which has a significant effect on the potential for the discharge of pollutants to the MS4 or to the waters of the United States, and which has not otherwise been addressed in the SWPPP, or if the SWPPP proves to be ineffective in eliminating or significantly minimizing pollutants, or in otherwise achieving the general objective of controlling pollutants in storm water discharges associated with construction activity. In addition, the SWPPP shall be amended to identify any new contractor and/or subcontractor that will implement a measure in the SWPPP.

14. Qualified personnel (provided by the operator of the construction site) shall inspect disturbed areas of the construction site that have not been finally stabilized, areas used for storage of materials that are exposed to precipitation, structural control measures, and locations where vehicles enter or exit the site, at least once every seven calendar days and within 24 hours of the end of the storm that is 0.5 inches or greater. Disturbed areas and areas used for storage of materials that are exposed to precipitation shall be inspected for evidence of, or the potential for, pollutants entering the drainage system. Erosion and sediment control measures identified in the SWPPP shall be observed to ensure that they are operating correctly. Where discharge locations or points are accessible, they shall be inspected to ascertain whether erosion control measures are effective in preventing significant impacts to receiving waters or the MS4. Locations where vehicles enter or exit the site shall be inspected for evidence of off-site sediment tracking.

15. In case of emergency, City forces will perform corrections and deduct their cost from the escrow account.

16. Based on the results of the inspections required by paragraph B.14, the site description and/or the pollution prevention measures identified in the SWPPP shall be revised as appropriate, but in no case later than seven calendar days following the inspection. Such modifications shall provide for timely implementation of any changes to the SWPPP within seven calendar days following the inspection.

17. A report summarizing the scope of any inspection required by paragraph B.14, and the name(s) and qualifications of personnel making the inspection, the date(s) of the inspection, major observations relating to the implementation of the SWPPP, and actions taken in accordance with paragraph B.15 above shall be made and retained as part of the SWPPP for at least three years from the date that the site is finally stabilized. Such report shall identify any incidence of noncompliance. Where a report does not identify any incidence of noncompliance, the report shall contain a certification that the facility is in compliance with the SWPPP, the

facility's NPDES permit, and this Ordinance. The report shall be certified and signed by the person responsible for making the report.

18. The operator shall retain copies of any SWPPP and all reports required by this Ordinance or by the NPDES permit for the site, and records of all data used to complete the NOI, for a period of at least three years from the date that the site is finally stabilized.

19. Where a site has been finally stabilized and all storm water discharges from construction activities that are authorized by this Ordinance and by the NPDES permit for those construction activities are eliminated, or where the operator of all storm water discharges at a facility changes, the operator of the construction site shall submit to the City Manager a Notice of Termination (NOT) that includes the information required for Notices of Termination by Part VIII of the Construction General Permit.

20. Upon final stabilization of the construction site, the owner (or the duly authorized representative thereof) shall submit written certification to the City Manager that the site has been finally stabilized. The City may withhold an occupancy or use permit for any premises constructed on the site until such certification of final stabilization has been filed and the City Manager has determined, following any appropriate inspection, that final stabilization has, in fact, occurred and that any required permanent structural controls have been completed. *(End of ordinance excerpt)*

Regulations Affecting Your Construction Activity

On March 5, 2008, the Texas Commission on Environmental Quality (TCEQ) issued a new General Permit to Discharge Waste from construction sites, under the Texas Pollutant Discharge Elimination System (TPDES). This permit applies to waste discharges including **storm water discharges** from all construction sites that will disturb one or more acres of land, or are part of a common plan of development that in total will disturb one or more acres of land. Under the Phase II storm water regulations affecting small municipalities, the City of Carrollton is required to develop and implement a program to reduce pollutants in storm water from construction activities disturbing one or more acres on land. As part of our program, the City is requiring construction operators of sites located within city limits, to comply with the requirements of the TPDES construction permit. The following is a brief list of those requirements.

- If you are disturbing 1 or more acres of land or, are part of a common development plan that is disturbing 1 or more acres of land, **you are required** to obtain a TPDES permit for storm water discharges from your construction activity.

- The TPDES permit separates construction sites into two categories: **large construction sites** that will disturb (by itself or as part of a common plan of development) 5 or more acres of land; and **small construction sites** that will disturb (alone or as part of a common plan of development) between 1 and 5 acres of land. Construction is defined as the exposure of soil resulting from activities such as clearing, grading, and excavating.

- To apply for the permit, **large construction sites:**

  - **Must** submit to the TCEQ a Notice of Intent (NOI), together with a $325 application fee for paper submission at least 7 days prior to commencing construction activities or $225 for electronic submission, prior to commencing construction activities;
  - **Must** develop and implement a **Storm Water Pollution Prevention Plan (SWP3)** before the submittal of the NOI;
  - **Must** post a signed copy of the NOI and a site notice at the construction site for public viewing and;
  - **Must** provide a copy of the NOI to the City, at least 2 days prior to commencing construction activities.
  - **Primary Operators must** submit a Notice of Termination (NOT) to TCEQ and a copy to the city within 30 days of meeting the conditions specified in the permit.
  - **Secondary Operators must** submit a copy of the completed Site Notice to the city within 30 days of meeting the conditions for termination specified in the permit

- To obtain permit coverage, **small construction sites:**
  - **Must** develop and implement a Storm Water Pollution Prevention Plan (SWP3);
  - **Must** post a signed copy of the construction site notice published by TCEQ at the construction site for public viewing and;
  - **Must** provide a copy of the signed construction site notice to the City, at least 2 days prior to commencing construction activities.
  - **Must** complete the applicable portion of the site notice and submit a copy to the city within 30 days after meeting the conditions specified in the permit to terminate coverage.
  - **Small construction sites are not** required to submit a NOI **nor** pay the fee.

- The **SWP3** must identify and address all potentials sources of pollution at the site, and describe and ensure implementation practices that will be used to reduce the pollutants in stormwater discharges from the site.
- If you are a homebuilder and have several lots in a subdivision, you only need to submit one NOI application for all of your lots. You can prepare your own SWP3, or be part of a general SWP3 for the whole development. In a common SWP3, individual responsibilities among all operators **must** be clearly assigned.

Erosion and Pollution Controls

- Control measures such as silt fences, inlet protection, etc., **must** be working properly. Not all devices will work everywhere; **you are responsible** for cleaning and replacing any device as necessary. Inlet protection must be inspected regularly and cleaned when sediment has covered the fabric. If using hay bales, they must be replaced as soon as they show signs of decomposition. Silt fences that have fallen or are damaged in any other way must be replaced immediately. **Using only qualified personnel** to install your control measures will save you troubles in the long run.

- **You are responsible** for all the waste generated at your construction site. All waste must be placed in a trash container at all times. The container must prevent trash from being blown out the site. Trash and construction waste must be removed from the site and disposed of promptly. If your waste is deposited or blown to a creek or any other area outside your site, you are responsible for cleaning it immediately. Both onsite and offsite material storage areas and appropriate housekeeping practices must be included in your SWP3. **If you are using a nearby lot for storage of materials, you are responsible for maintaining the sediment controls in that lot, even if the lot is not your own. If your contractor unloads materials in such a lot, you are equally responsible for installing new devices or replacing existing ones.**

You should preserve existing vegetation when possible, and **must** stabilize any disturbed area where construction activity has temporarily or permanently ceased. The stabilization must take place within 14 days of the end of activities unless construction will resume within 21 days. You have several options to accomplish temporary stabilization including revegetation, sod stabilization, mulching, geotextile fabric and others. You must make sure that the method you are using is effective; **stabilization is not the mere application of grass seed!**

- **You are required** to minimize off site vehicle tracking of sediments and the generation of dust, including those caused by your contractors and suppliers.

- **It is illegal** to discharge any solid materials, including building materials, to waters of the United States, except as authorized by a permit issued under section 404 of the CWA (COE permit). Our creeks and the Trinity River are waters of the United States.

- **You** (or other qualified personnel) **are required** to inspect the site and erosion and sediment controls at a frequency specified by the permit. The SWP3 must be modified based on the results of inspections.

- If you have a temporary concrete batch plant on site, you must comply with numeric effluent limitations including sampling of storm water runoff and preparation of a Discharge Monitoring Report.

- The SWP3 is a **LIVING DOCUMENT** and it **must** reflect the changes in the site. Any modifications in the site must be documented in the SWP3.

For more information contact
City of Carrollton
Environmental Services Storm Water Program
972-466-3060

Chapter 173. Pollution Control

Sec. 173.01. Prevention of water pollution.

It shall be unlawful for any person, either as owner, tenant or employee, firm or corporation to commit such acts as listed below that will adversely affect the quality of water in the storm drainage system and watercourses within the city:

(A) Dumping of grass clippings, leaves, brush or any debris to curb, gutter, storm inlet, storm drain or water course is prohibited.

(B) No person, firm or corporation shall permit crankcase drainings, vehicle engine wash or other oils, greases or like material to go to any area that will drain to the storm system or water courses.

(C) No liquid, semi-liquid or chemical waste shall be deposited in any area that will drain to the storm system or watercourses. All such materials shall be disposed of at a site approved for the disposal of those liquids.

(D) Oil and sand traps from automotive centers, service stations and vehicle wash operations to not be connected to the sanitary sewer.

(E) Bus and truck lines, who operate more than two vehicles, and who perform vehicle wash operations to not have wash effluent, be trapped and placed in the sanitary sewer in accordance with city plumbing code.

(F) Aircraft washing to not be trapped and effluent placed in sanitary sewer accordance with the city plumbing code.

(G) With the exception of clean water, no cooling tower, compressor or boiler blowdown water will be permitted to flow to the storm system or water courses.

(H) Water from nurseries used to water plants is prohibited from flowing to streets and alleys to the extent that a nuisance is created by standing water, damage to streets or alleys or affecting the free passage of foot traffic.

(I) Filter back wash from swimming pools, spas, and fountains to not drain to the sanitary sewer or other manner as approved by the Director of Environmental Health.

(J) Animal pens for kennels, animal hospitals, packing houses, poultry processing plants and dairies to not be connected to the sanitary sewer in accordance with the plumbing code. Exceptions may be made when the establishment is issued a permit by the environmental protection agency, Texas Natural Resource Conservation Commission, City Department of Public Works and City Environmental Health Department.

(K) Ready mixed concrete, mortar and asphalt base material delivery trucks are prohibited from dumping unused materials to any area that will drain to streams or watercourses. All residue shall be disposed of, and vehicles washed down at a site approved for that purpose.

('65 Code, § 9-6) (Ord. 551, passed 12-3-73)
Cross references: Penalty, see § 10.99.

Erosion Control Procedure

All work must comply with the following:

1. Silt fence or soil stabilization fabric must be installed in an approved manner and maintained.
2. Alleys and streets must be free of dirt, sand, trash and debris.
3. Trash must be picked up daily and contained on the construction site.
4. No sand, dirt or debris can be piled within 5 feet of a street or alley.
5. A copy of the erosion control procedure card must be posted on the job-site.
6. Storm water inlet protection must be maintained at all times.
7. A concrete wash site must be provided and maintained.
8. Streets and alleys must be cleaned of mud, dirt and debris within 24 hours of notification.

Builders Name _____

Builders Phone Number _____

Concrete Wash Site Location _____

Customer Comments

Please take a moment to let us know about your experiences with our department or personnel.

Name: _____ Date: _____

Company: _____

Your opinions are important to us. Any comments are welcome.

1. Employees/services_____

_____

_____

_____

2. Application review/inspection process _____

_____

_____

_____

3. Knowledge and professionalism _____

_____

_____

_____

4. Rules and regulations _____

_____

_____

_____

5. Our department compared with other cities _____

_____

_____

_____

6. Other comments_____

_____

_____

_____